RAROPEM
BACK ON TRACK

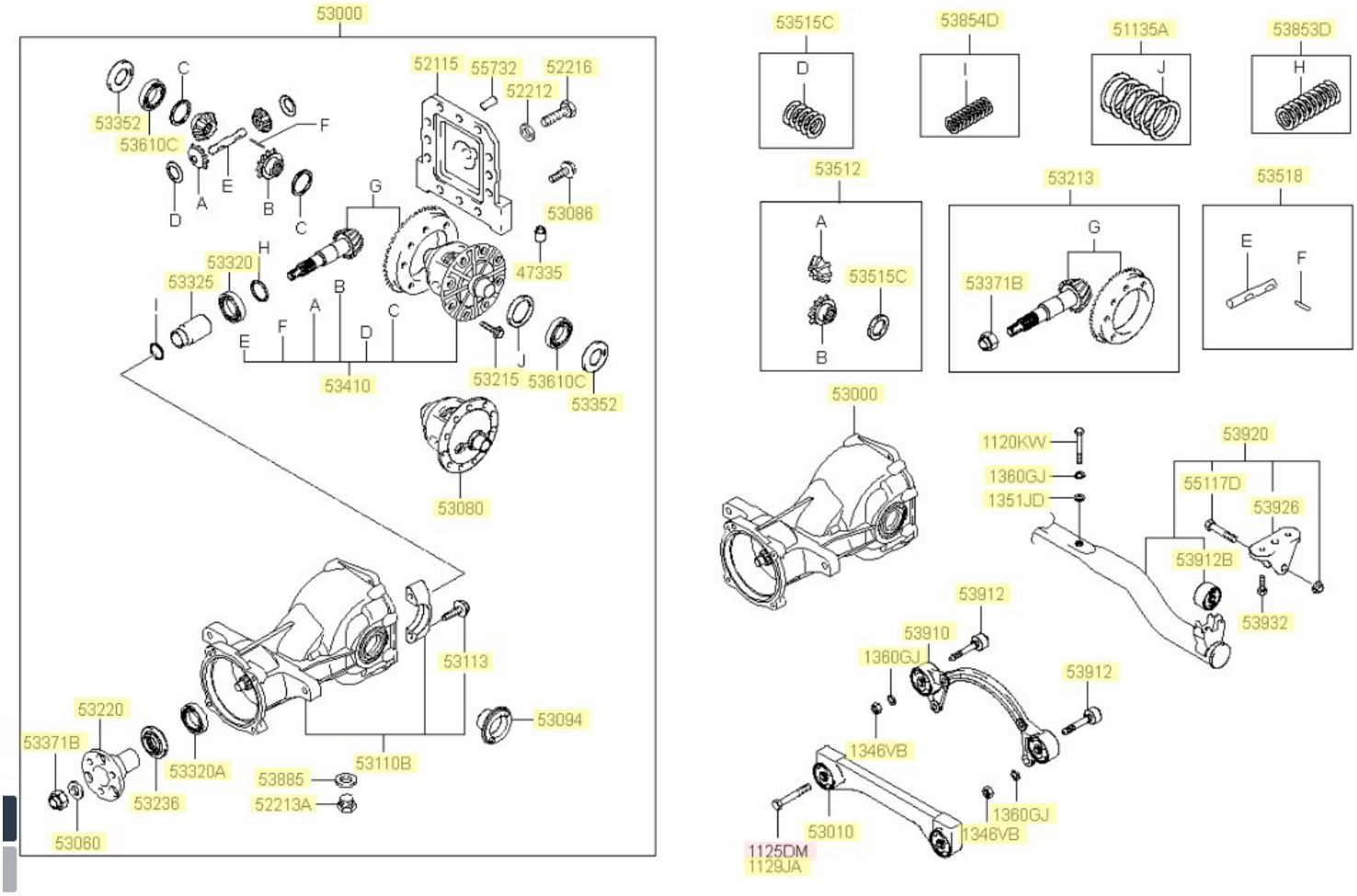

Diferential Spate HYUNDAI Santa Fe - 5300039111