RAROPEM

BACK ON TRACK

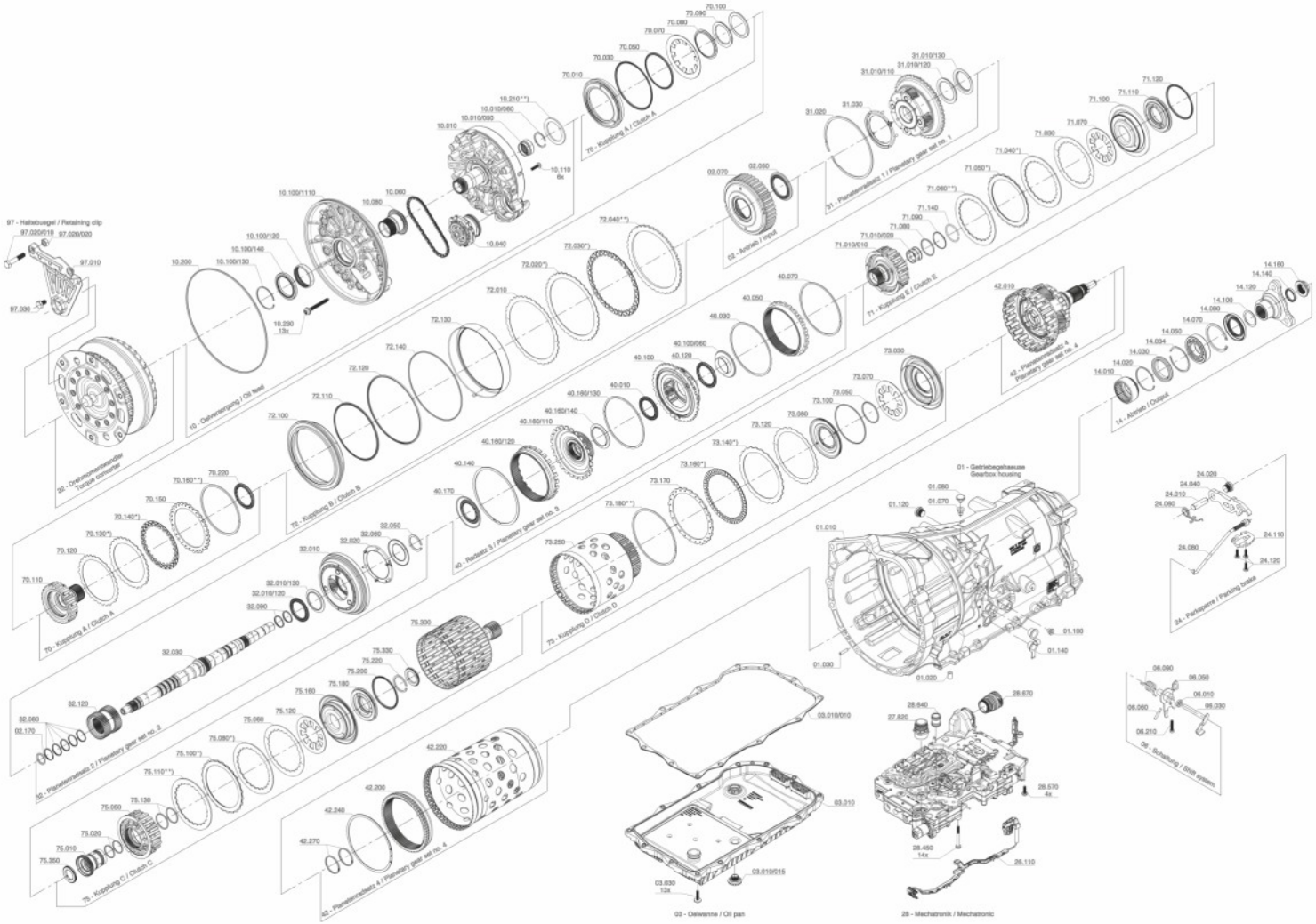

Desen tehnic cutie de viteze ZF8HP45, ZF8HP50, 845RE, 0CM